Add: 2nd Floor, Building C, Jia Huang Yuan Technical Park, Tiegang, Xixiang, Bao'an District, Shenzhen city, Guangdong province, P.R.China 518126.
E-mail: Helen@kingtechgroup.cn TEL: 86-755- 23037763 Mobile: +86-139-2528-0716 Web: www.kingtechgroup.cn

SPECIFICATION

Product Model: PV028000YX50D(Rev.V0)

Designed by	R&D Checked by	Quality Department by	Approved by

Approval by Customer:

Ok

NG, Problem survey

Approved By_____

Add: 2nd Floor, Building C, Jia Huang Yuan Technical Park, Tiegang, Xixiang, Bao'an District, Shenzhen city, Guangdong province, P.R.China 518126.
E-mail: Helen@kingtechgroup.cn TEL: 86-755- 23037763 Mobile: +86-139-2528-0716 Web: www.kingtechgroup.cn

Revision Record

REV NO.	REV DATE	CONTENTS	Note
V0	2015/07/31	NEW ISSUE	

Add: 2nd Floor, Building C, Jia Huang Yuan Technical Park, Tiegang, Xixiang, Bao'an District, Shenzhen city, Guangdong province, P.R.China 518126.
E-mail: Helen@kingtechgroup.cn TEL: 86-755- 23037763 Mobile: +86-139-2528-0716 Web: www.kingtechgroup.cn

Table of Contents

Add: 2nd Floor, Building C, Jia Huang Yuan Technical Park, Tiegang, Xixiang, Bao'an District, Shenzhen city, Guangdong province, P.R.China 518126.
E-mail: Helen@kingtechgroup.cn TEL: 86-755- 23037763 Mobile: +86-139-2528-0716 Web: www.kingtechgroup.cn

1. Scope

This specification defines general provisions as well as inspection standards for TFT module supplied by Kingtech Group Co.,Ltd.

If the event of unforeseen problem or unspecified items may occur, naturally shall negotiate and agree to solution

2. General Information

ITEM	STANDARD VALUES	UNITS
LCD type	2.8"TFT	--
Dot arrangement	240(RGB)×320	dots
Color filter array	RGB vertical stripe	--
Display mode	TN / Transmission / Normally White	-
Gray Scale Inversion Direction	12 O'clock	--
Eyes Viewing Direction	6 O'clock	--
Driver IC	ILI9341	--
Module size	50.0(W)×69.2(H)×2.5(T)	mm
Active area	43.2(W)×57.6(H)	mm
Dot pitch	0.18(W)×0.18(H)	mm
Interface	i80-system 8/16/18-bit MCU interface SPI 16/18-bit RGB interface	--
Operating temperature	-20 ~ +70	°C
Storage temperature	-30 ~ +80	°C
Back Light	4 White LED	--
Weight	TBD	g

3. External Dimensions

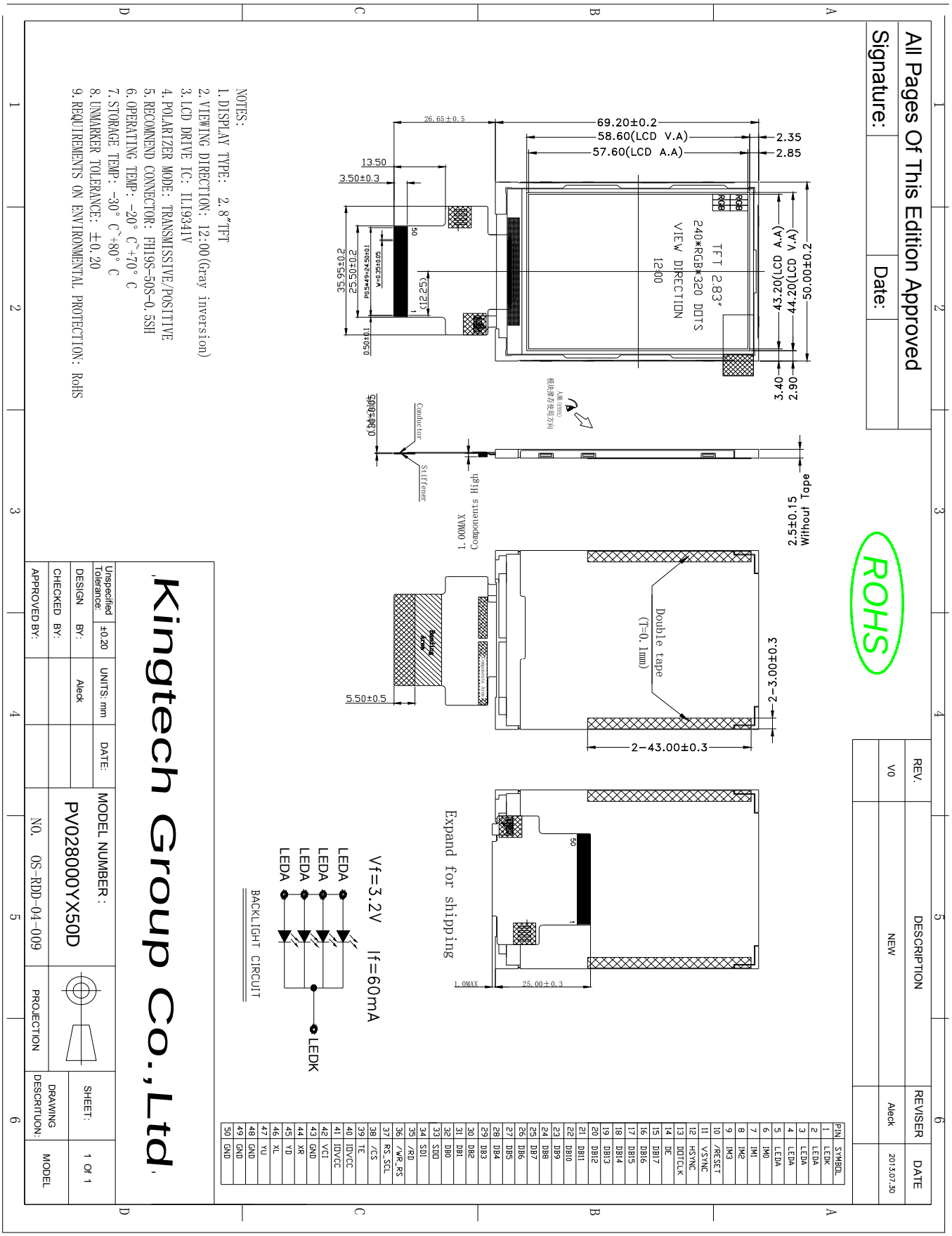

4. Interface Description

PIN NO.	PIN NAME	DESCRIPTION
1	LEDK	The Anode of LED power
2-5	LEDA1-LEDA4	The cathode of LED power
6	IM3	MPU interface mode select pin: IM[3,2,1,0]=[0,1,0,1]:3-wire 9-bit data serial interface I,SDI:IN/OUT IM[3,2,1,0]=[0,1,1,0]:4-wire 8-bit data serial interface I,SDI:IN/OUT IM[3,2,1,0]=[1,1,0,1]:3-wire9-bitdataserialinterfaceII,SDI:IN,SDO:OUT IM[3,2,1,0]=[1,1,1,0]:4-wire8-bitdataserialinterfaceII,SDI:IN,SDO:OUT
7	IM2	
8	IM1	
9	IM0	
10	RESET	Reset pin setting either pin low initializes the LSI Must be reset after power supplied
11	VSYNC	Frame synchronizing signal for RGB interface operation.
12	HSYNC	Line synchronizing signal for RGB interface operation.
13	DOTCLK	Dot clock signal for RGB interface operation.
14	DE	Data enable signal for RGB interface operation.
15-32	DB17-DB0	Data bus
33	SDO	Serial output signal. The data is applied on the rising edge of the SCL signal.
34	SDI	When IM [3]: Low, Serial in/out signal. When IM [3]: High, Serial input signal. The data is applied on the rising edge of the SCL signal.
35	RD	Read signal input terminal, Active at ‘L’.
36	/WR	Write signal input terminal, Active at ‘L‘
37	RS	Register select signal input terminal: RS=’H’: select a control register; RS=’L’: select an index or status register.
38	CS	Chip select signal input terminal, Active at ‘L’
39	TE	Tearing effect output pin to synchronize MPU to frame writing.
40	IOVCC	Logic operating voltage.
41	IOVCC	Logic operating voltage.
42	VCI	Analog operating voltage.
43	GND	Power ground
44	XR	Touch panel coordinate in the right side of envisage drawing.
45	YD	Touch panel coordinate in the bottom side of envisage drawing.

46	XL	Touch panel coordinate in the left side of envisage drawing.
47	YU	Touch panel coordinate in the up side of envisage drawing.
48	GND	Power ground
49	GND	Power ground
50	GND	Power ground

Note1:

- Select the MCU interface mode

IM3	IM2	IM1	IM0	MCU-Interface Mode	DB Pin in use	
					Register/Content	GRAM
0	0	0	0	80 MCU 8-bit bus interface Ⅰ	D[7:0]	D[7:0]
0	0	0	1	80 MCU 16-bit bus interface Ⅰ	D[7:0]	D[15:0]
0	0	1	0	80 MCU 9-bit bus interface Ⅰ	D[7:0]	D[8:0]
0	0	1	1	80 MCU 18-bit bus interface Ⅰ	D[7:0]	D[17:0]
0	1	0	1	3-wire 9-bit data serial interface Ⅰ	SDA: In/OUT	
0	1	1	0	4-wire 8-bit data serial interface Ⅰ	SDA: In/OUT	
1	0	0	0	80 MCU 16-bit bus interface Ⅱ	D[8:1]	D[17:10], D[8:1]
1	0	0	1	80 MCU 8-bit bus interface Ⅱ	D[17:10]	D[17:10]
1	0	1	0	80 MCU 18-bit bus interface Ⅱ	D[8:1]	D[17:0]
1	0	1	1	80 MCU 9-bit bus interface Ⅱ	D[17:10]	D[17:9]
1	1	0	1	3-wire 9-bit data serial interface Ⅱ	SDI: In SDO: Out	
1	1	1	0	4-wire 8-bit data serial interface Ⅱ	SDI: In SDO: Out	

MPU Parallel interface bus and serial interface select

If use RGB Interface must select serial interface.

* : Fix this pin at VDDI or VSS.

5. Absolute Maximum Ratings

Item	Symbol	Min.	Max.	Unit
Logic Supply Voltage	IOVCC	-0.3	4.6	V
Analog Supply Voltage	VCI	-0.3	4.6	V
Input Voltage	Vin	-0.3	IOVCC +0.3	V
Operating Temperature	TOP	-20	70	°C
Storage Temperature	TST	-30	80	°C
Storage Humidity	HD	20	90	%RH

6. DC Characteristics

Item	Symbol	Min.	Typ.	Max.	Unit	Remark
Logic Supply Voltage	IOVCC	1.65	2.8	3.3	V	-
Analog Supply Voltage	VCI	2.5	2.8	3.3	V	-
Input High Voltage	V_{IH}	0.7VCI	-	IOVCC	V	-
Input Low Voltage	V_{IL}	GND	-	0.3 IOVCC	V	-
Output High Voltage	V_{OH}	0.8 VCI	-	IOVCC	V	-
Output Low Voltage	V_{OL}	GND	-	0.2 IOVCC	V	-
I/O Leak Current	I_{LI}	-1	-	1	uA	-
Supply Current	IDD	-	7.0	10	mA	-

7. Timing Characteristics

7.1 i80-System Interface Timing Characteristics

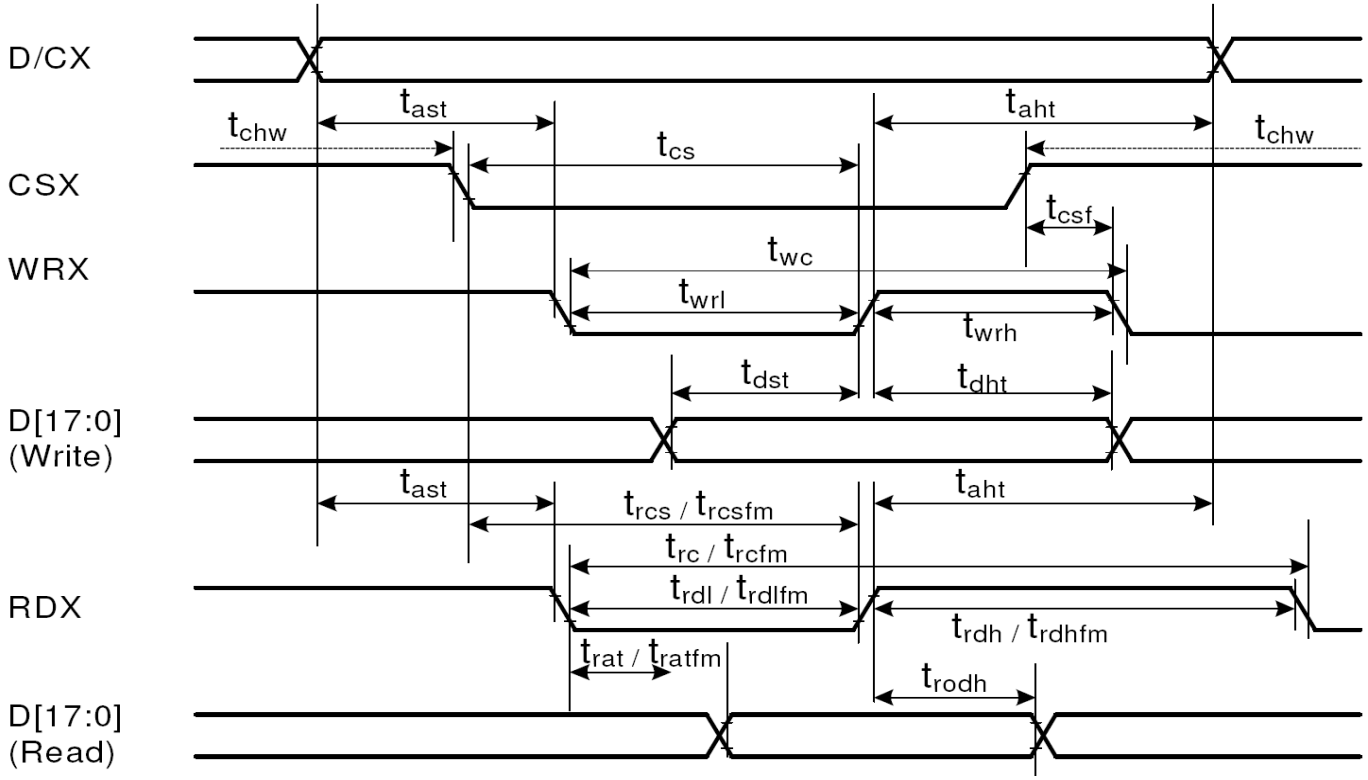

Signal	Symbol	Parameter	min	max	Unit	Description
DCX	tast	Address setup time	0	-	ns	
	taht	Address hold time (Write/Read)	0	-	ns	
CSX	tchw	CSX "H" pulse width	0	-	ns	
	tcs	Chip Select setup time (Write)	15	-	ns	
	trcs	Chip Select setup time (Read ID)	45	-	ns	
	trcsfm	Chip Select setup time (Read FM)	355	-	ns	
	tcsf	Chip Select Wait time (Write/Read)	10	-	ns	
WRX	twc	Write cycle	66	-	ns	
	twrh	Write Control pulse H duration	15	-	ns	
	twrl	Write Control pulse L duration	15	-	ns	
RDX (FM)	trcfm	Read Cycle (FM)	450	-	ns	
	trdhfm	Read Control H duration (FM)	90	-	ns	
	trdlfm	Read Control L duration (FM)	355	-	ns	
RDX (ID)	trc	Read cycle (ID)	160	-	ns	
	trdh	Read Control pulse H duration	90	-	ns	
	trdl	Read Control pulse L duration	45	-	ns	
D[17:0], D[17:10]&D[8:1], D[17:10], D[17:9]	tdst	Write data setup time	10	-	ns	For maximum CL=30pF For minimum CL=8pF
	tdht	Write data hold time	10	-	ns	
	trat	Read access time	-	40	ns	
	tratfm	Read access time	-	340	ns	
	trod	Read output disable time	20	80	ns	

Signal	Symbol	Parameter	min	max	Unit	Description
VSYNC / HSYNC	tSYNCS	VSYNC/HSYNC setup time	15	-	ns	18/16-bit bus RGB interface mode
	tSYNCH	VSYNC/HSYNC hold time	15	-	ns	
DE	tENS	DE setup time	15	-	ns	
	tENH	DE hold time	15	-	ns	

7.2 Reset Timing Characteristics

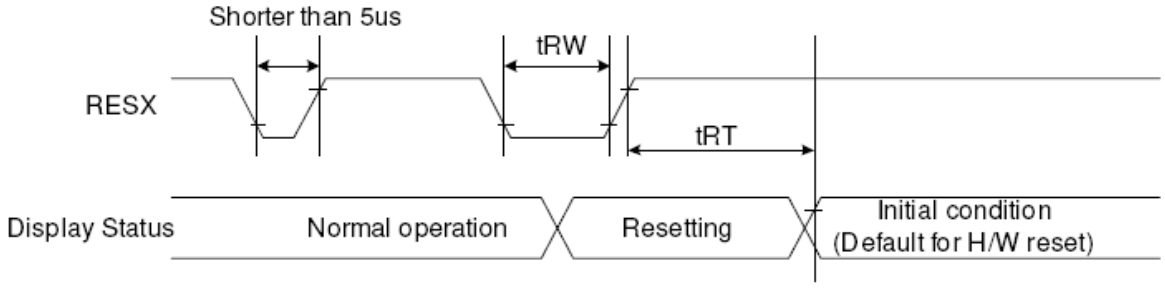

Signal	Symbol	Parameter	Min	Max	Unit
RESX	tRW	Reset pulse duration	10		uS
	tRT	Reset cancel		5 (note 1,5)	mS
				120 (note 1,6,7)	mS

Note 1: The reset cancel includes also required time for loading ID bytes, VCOM setting and other settings from NV memory to registers. This loading is done every time when there is HW reset cancel time (tRT) within 5 ms after a rising edge of RESX.

Note 2: Spike due to an electrostatic discharge on RESX line does not cause irregular system reset according to the table below: -

RESX Pulse	Action
Shorter than 5us	Reset Rejected
Longer than 10us	Reset
Between 5us and 10us	Reset starts

Note 3: During the Resetting period, the display will be blanked (The display is entering blanking sequence, which maximum time is 120 ms, when Reset Starts in Sleep Out –mode. The display remains the blank state in Sleep In -mode.) And then return to Default condition for Hardware Reset.

Note 4: Spike Rejection also applies during a valid reset pulse as shown below:

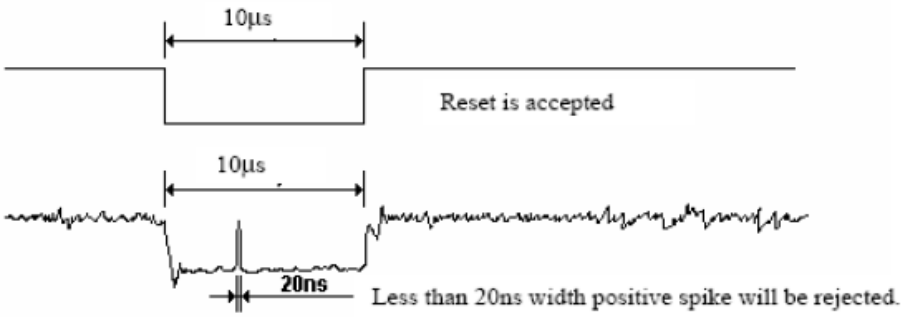

Note 5: When Reset applied during Sleep In Mode.

Note 6: When Reset applied during Sleep Out Mode.

Note 7: It is necessary to wait 5msec after releasing RESX before sending commands. Also Sleep Out command cannot be sent for 120msec.

8. Backlight Characteristic

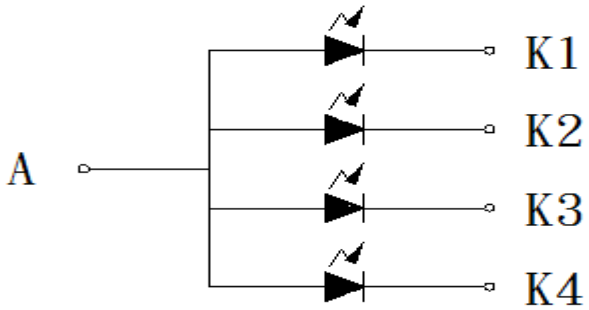

Item	Symbol	MIN	TYP	MAX	UNIT	Test Condition
Supply Voltage	Vf	2.9	3.2	3.5	V	If=60mA
Supply Current	If	-	60	80	mA	-
Luminous Intensity for LCM	-	-	260	-	cd/m^2	If=60mA
Uniformity for LCM	-	75	80	-	%	If=60mA
Life Time	-	-	20000	-	Hr	If=60mA
Backlight Color	White					

9. Optical Characteristics

Item	Conditions		Min.	Typ.	Max.	Unit	Note
Viewing Angle (CR>10)	Horizontal	θL	-	45	-	degree	(1),(2),(6)
		θR	-	45	-		
	Vertical	θT	-	50	-		
		θB	-	20	-		
Contrast Ratio	Center		-	500	-	-	(1),(3),(6)
Response Time	Rising + Falling		-	16	-	ms	(1),(4),(6)
CF Color Chromaticity (CIE1931)	Red x		Typ. -0.05	0.60	Typ. +0.05	-	(1), (6)
	Red y			0.34		-	
	Green x			0.29		-	
	Green y			0.57		-	
	Blue x			0.13		-	
	Blue y			0.06		-	
	White x			0.25		-	
	White y			0.26		-	
NTSC	CIE1931		-	55.3	-	%	(1),(6)

Note (1) Measurement Setup: The LCD module should be stabilized at given temp. 25°C for 15 minutes to avoid abrupt temperature change during measuring. In order to stabilize the luminance, the measurement should be executed after lighting backlight for 15 minutes in a windless room.

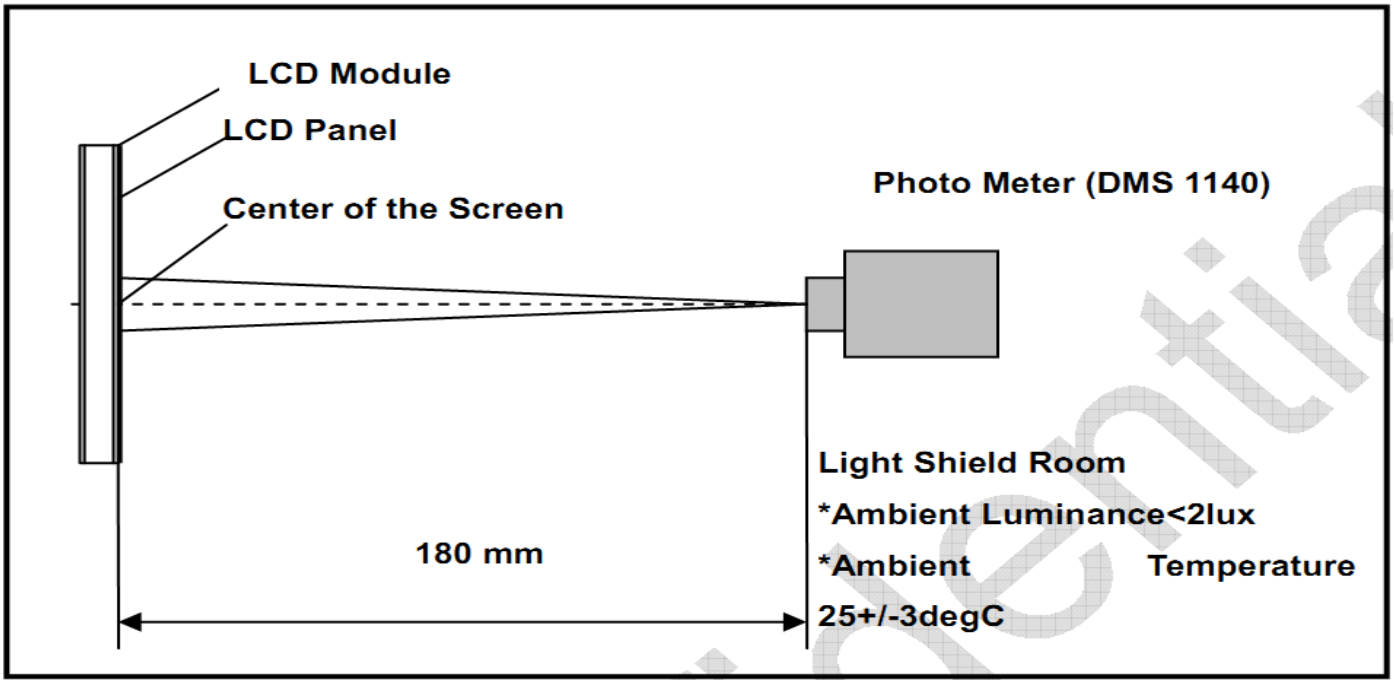

Note (2) Definition of Viewing Angle

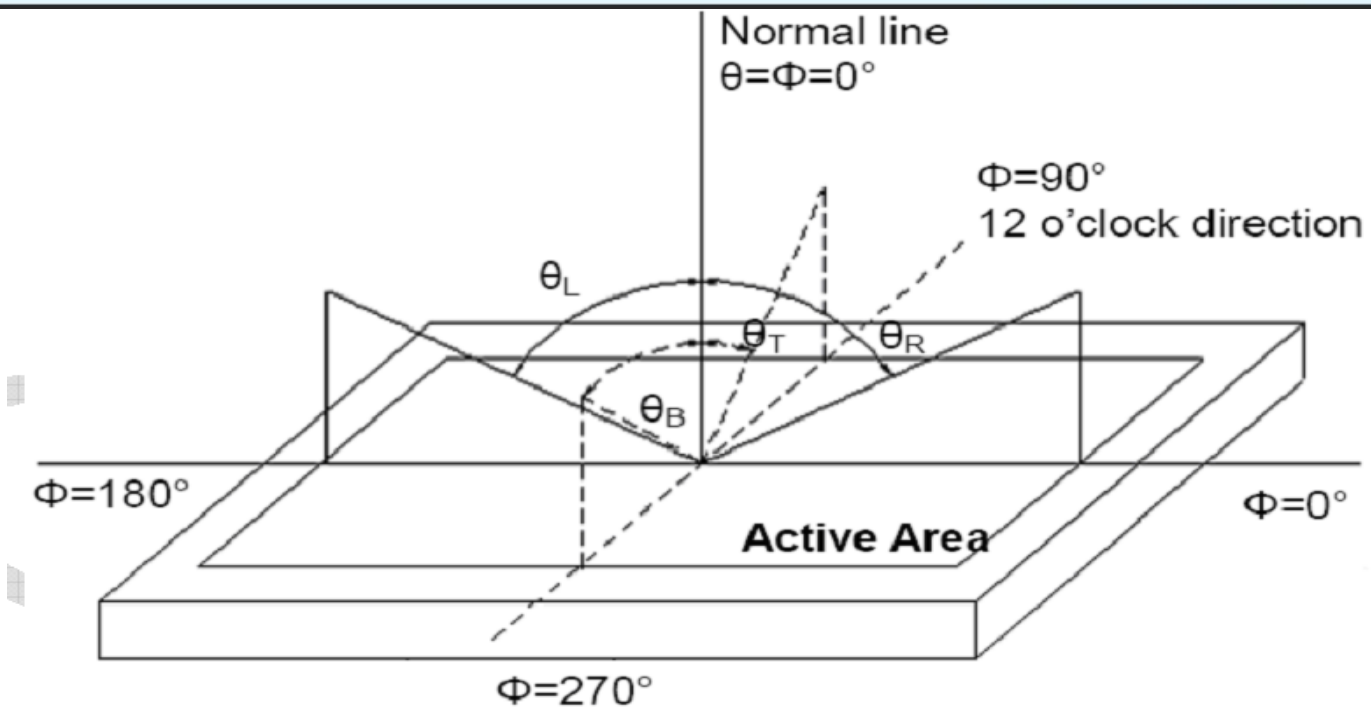

Note (3) Definition of Contrast Ratio (CR)

The contrast ratio can be calculated by the following expression

Contrast Ratio (CR) = L63 / L0

L63: Luminance of gray level 63, L0: Luminance of gray level 0

Note (4) Definition of response time

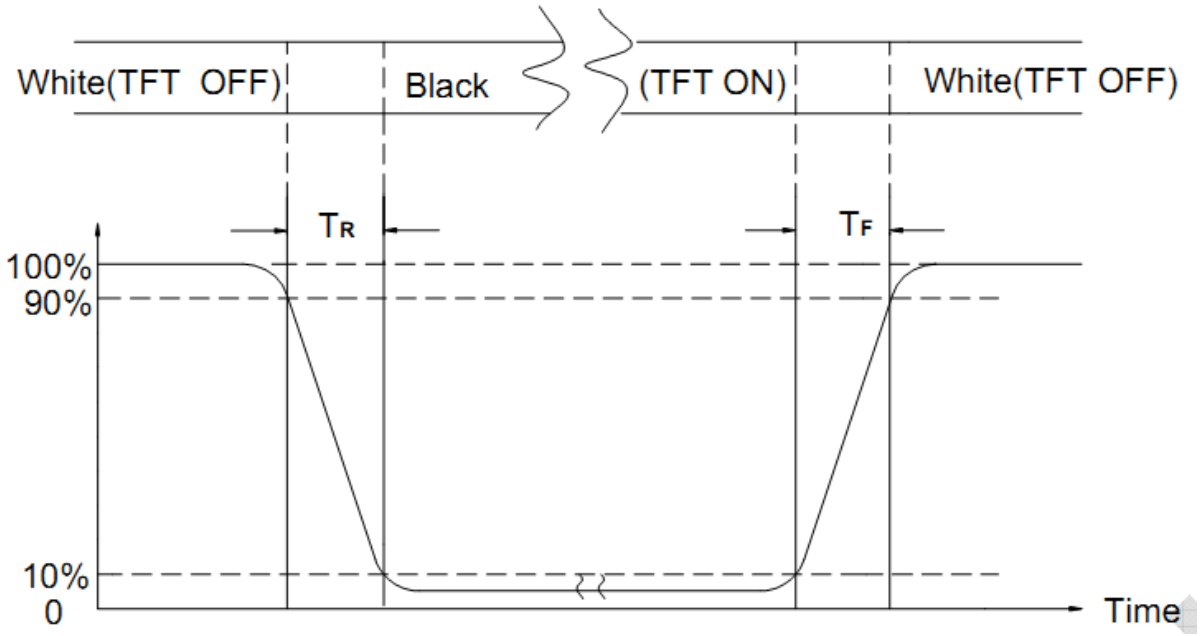

Note (5) Definition of Transmittance (Module is without signal input)

Transmittance = Center Luminance of LCD / Center Luminance of Back Light x 100%

Note (6) Definition of color chromaticity (CIE1931)

Color coordinates measured at the center point of LCD

10. Reliability Test Conditions and Methods

NO.	TEST ITEMS	TEST CONDITION	INSPECTION AFTER TEST
①	High Temperature Storage	80°C±2°C×96Hours	Inspection after 2~4hours storage at room temperature, the samples should be free from defects: 1, Air bubble in the LCD. 2, Seal leak. 3, Non-display. 4, Missing segments. 5, Glass crack. 6, Current IDD is twice higher than initial value. 7, The surface shall be free from damage. 8, The electric characteristic requirements shall be satisfied.
②	Low Temperature Storage	-30°C±2°C×96Hours	
③	High Temperature Operating	70°C±2°C×96Hours	
④	Low Temperature Operating	-20°C±2°C×96Hours	
⑤	Temperature Cycle(Storage)	-20°C ⟺ 25°C ⟺ 70°C (30min) (5min) (30min) 1cycle Total 10cycle	
⑥	Damp Proof Test (Storage)	50°C±5°C×90%RH×120Hours	
⑦	Vibration Test	Frequency:10Hz~55Hz~10Hz Amplitude:1.5MM X,Y,Z direction for total 3hours (packing condition test will be tested by a carton)	
⑧	Drooping Test	Drop to the ground from 1M height one time every side of carton. (packing condition test will be tested by a carton)	
⑨	ESD Test	Voltage:±8KV,R:330Ω,C:150PF,Air Mode,10times	

REMARK:
1, The Test samples should be applied to only one test item.
2, Sample side for each test item is 5~10pcs.
3,For Damp Proof Test, Pure water(Resistance＞10MΩ)should be used.
4,In case of malfunction defect caused by ESD damage, if it would be recovered to normal state after resetting, it would be judge as a good part.
5, EL evaluation should be accepted from reliability test with humidity and temperature: Some defects such as black spot/blemish can happen by natural chemical reaction with humidity and Fluorescence EL has.
6, Failure Judgment Criterion: Basic Specification Electrical Characteristic, Mechanical Characteristic, Optical Characteristic.

Add: 2nd Floor, Building C, Jia Huang Yuan Technical Park, Tiegang, Xixiang, Bao'an District, Shenzhen city, Guangdong province, P.R.China 518126.
E-mail: Helen@kingtechgroup.cn TEL: 86-755- 23037763 Mobile: +86-139-2528-0716 Web: www.kingtechgroup.cn

11. Inspection Standard

11.1. QUALITY :

THE QUALITY OF GOODS SUPPLIED TO PURCHASER SHALL COME UP TO THE FOLLOWING STANDARD.

11.1.1. THE METHOD OF PRESERVING GOODS

AFTER DELIVERY OF GOODS FROM AMSON TO PURCHASER. PURCHASER SHALL CONTROL THE LCM AT -10℃ TO 40℃ ,AND IT MIGHT BE DESIRABLE TO KEEP AT THE NORMAL ROOM TEMPERATURE AND HUMIDITY UNTIL INCOMING INSPECTION OR THROWING INTO PROCESS LINE.

11.1.2. INCOMING INSPECTION

(A) THE METHOD OF INSPECTION

IF PURCHASER MAKE AN INCOMING INSPECTION , A SAMPLING PLAN SHALL BE APPLIED ON THE CONDITION THAT QUALITY OF ONE DELIVERY SHALL BE REGARDED AS ONE LOT.

(B) THE STANDARD OF QUALITY

ISO-2859-1 (SAME AS MIL-STD-105E) , LEVEL Ⅱ SINGLE PLAN.

CLASS	AQL(%)
CRITICAL	0.4 %
MAJOR	0.65 %
MINOR	1.5 %
TOTAL	1.5 %

EVERY ITEM SHALL BE INSPECTED ACCORDING TO THE CLASS.

(C) MEASURE

IF AS THE RESULT OF ABOVE RECEIVING INSPECTION , A LOT OUT IS DISCOVERED. PURCHASER SHALL BE INFORM SELLER OF IT WITHIN SEVEN DAYS. BUT FIRST SHIPMENT WITHIN FOURTEEN DAYS.

11.1.3. WARRANTY POLICY

AMSON WILL PROVIDE ONE-YEAR WARRANTY FOR THE PRODUCTS ONLY IF UNDER SPECIFICATION OPERATING CONDITIONS. AMSON WILL REPLACE NEW PRODUCTS FOR THESE DEFECT PRODUCTS WHICH UNDER WARRANTY PERIOD AND BELONG TO THE RESPONSIBILITY OF AMSON.

11.2. CHECKING CONDITION

11.2.1.CHECKING DIRECTION SHALL BE IN THE 45 DEGREE AREA TO FACE THE SAMPLE.

11.2.2.CHECKER SHALL SEE OVER 300±25 mm. WITH BARE EYES FAR FROM SAMPLE AND USING 2 PCS. OF 20W FLUORESCENT LAMP.

Add: 2nd Floor, Building C, Jia Huang Yuan Technical Park, Tiegang, Xixiang, Bao'an District, Shenzhen city, Guangdong province, P.R.China 518126.
E-mail: Helen@kingtechgroup.cn TEL: 86-755- 23037763 Mobile: +86-139-2528-0716 Web: www.kingtechgroup.cn

11.3. INSPECTION PLAN :

CLASS	ITEM	JUDGEMENT	CLASS
PACKING & INDICATE	1. OUTSIDE AND INSIDE PACKAGE	"MODEL NO." , "LOT NO." AND "QUANTITY" SHOULD INDICATE ON THE PACKAGE.	Minor
	2. MODEL MIXED AND QUANTITY	OTHER MODEL MIXED.....REJECTED QUANTITY SHORT OR OVER.....REJECTED	Critical
	3. PRODUCT INDICATION	"MODEL NO." SHOULD INDICATE ON THE PRODUCT	Major
ASSEMBLY	4. DIMENSION, LCD GLASS SCRATCH AND SCRIBE DEFECT.	ACCORDING TO SPECIFICATION OR DRAWING.	Major
APPEARANCE	5. VIEWING AREA	POLARIZER EDGE OR LCD'S SEALING LINE IS VISABLE IN THE VIEWING AREA .....REJECTED	Minor
	6. BLEMISH、BLACK SPOT、WHITE SPOT IN THE LCD AND LCD GLASS CRACKS	ACCORDING TO STANDARD OF VISUAL INSPECTION(INSIDE VIEWING AREA)	Minor
	7. BLEMISH、BLACK SPOT WHITE SPOT AND SCRATCH ON THE POLARIZER	ACCORDING TO STANDARD OF VISUAL INSPECTION(INSIDE VIEWING AREA)	Minor
	8. BUBBLE IN POLARIZER	ACCORDING TO STANDARD OF VISUAL INSPECTION(INSIDE VIEWING AREA)	Minor
	9. LCD'S RAINBOW COLOR	STRONG DEVIATION COLOR (OR NEWTON RING) OF LCD.....REJECTED. OR ACCORDING TO LIMITED SAMPLE (IF NEEDED, AND INSIDE VIEWING AREA)	Minor
ELECTRICAL	10. ELECTRICAL AND OPTICAL CHARACTERISTICS (CONTRAST、VOP、CHROMATICITY ... ETC)	ACCORDING TO SPECIFICATION OR DRAWING . (INSIDE VIEWING AREA)	Critical
	11.MISSING LINE	MISSING DOT、LINE、CHARACTER ....REJECTED	Critical
	12.SHORT CIRCUIT、WRONG PATTERN DISPLAY	NO DISPLAY、WRONG PATTERN DISPLAY、CURRENT CONSUMPTION OUT OF SPECIFICATION..... REJECTED	Critical
	13. DOT DEFECT (FOR COLOR AND TFT)	ACCORDING TO STANDARD OF VISUAL INSPECTION	Minor

Add: 2nd Floor, Building C, Jia Huang Yuan Technical Park, Tiegang, Xixiang, Bao'an District, Shenzhen city, Guangdong province, P.R.China 518126.
E-mail: Helen@kingtechgroup.cn TEL: 86-755- 23037763 Mobile: +86-139-2528-0716 Web: www.kingtechgroup.cn

11.4. STANDARD OF VISUAL INSPECTION

<table>
<tr><th>NO.</th><th>CLASS</th><th>ITEM</th><th>JUDGEMENT</th></tr>
<tr><td>11.4.1</td><td>MINOR</td><td>BLACK AND WHITE SPOT
FOREIGN MATERIEL
DUST IN THE CELL
BLEMISH
SCRATCH</td><td>(A) ROUND TYPE: unit : mm.
<table>
<tr><th>DIAMETER (mm.)</th><th>ACCEPTABLE Q'TY</th></tr>
<tr><td>Φ ≦ 0.1</td><td>DISREGARD</td></tr>
<tr><td>0.1 < Φ ≦ 0.25</td><td>3 (Distance>5mm)</td></tr>
<tr><td>0.25 < Φ</td><td>0</td></tr>
</table>
NOTE: Φ=(LENGTH+WIDTH)/2
(B) LINEAR TYPE: unit : mm.
<table>
<tr><th>LENGTH</th><th>WIDTH</th><th>ACCEPTABLE Q'TY</th></tr>
<tr><td>------</td><td>W ≦0.03</td><td>DISREGARD</td></tr>
<tr><td>L ≦ 5.0</td><td>0.03 < W ≦0.07</td><td>3 (Distance>5mm)</td></tr>
<tr><td>------</td><td>0.07 < W</td><td>FOLLOW ROUND TYPE</td></tr>
</table></td></tr>
<tr><td>11.4.2</td><td>MINOR</td><td>BUBBLE IN POLARIZER
DENT ON POLARIZER</td><td>unit : mm.
<table>
<tr><th>DIAMETER</th><th>ACCEPTABLE Q'TY</th></tr>
<tr><td>Φ ≦ 0.2</td><td>DISREGARD</td></tr>
<tr><td>0.2 < Φ ≦ 0.5</td><td>2 (Distance>5mm)</td></tr>
<tr><td>0.5 < Φ</td><td>0</td></tr>
</table></td></tr>
<tr><td>11.4.3</td><td>MINOR</td><td>Dot Defect</td><td>
<table>
<tr><th>Items</th><th>ACC. Q'TY</th></tr>
<tr><td>Bright dot</td><td>N≦ 4</td></tr>
<tr><td>Dark dot</td><td>N≦ 4</td></tr>
</table>
Pixel Define :
 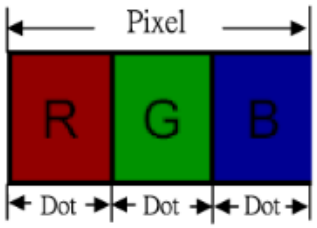

Note 1: The definition of dot: The size of a defective dot over 1/2 of whole dot is regarded as one defective dot.
Note 2: Bright dot: Dots appear bright and unchanged in size in which LCD panel is displaying under black pattern.
Note 3: Dark dot: Dots appear dark and unchanged in size in which LCD panel is displaying under pure red, green ,blue pattern.</td></tr>
</table>

Add: 2nd Floor, Building C, Jia Huang Yuan Technical Park, Tiegang, Xixiang, Bao'an District, Shenzhen city, Guangdong province, P.R.China 518126.
E-mail: Helen@kingtechgroup.cn **TEL:** 86-755- 23037763 **Mobile:** +86-139-2528-0716 **Web:** www.kingtechgroup.cn

NO.	CLASS	ITEM	JUDGEMENT	
11.4.4	MINOR	LCD GLASS CHIPPING	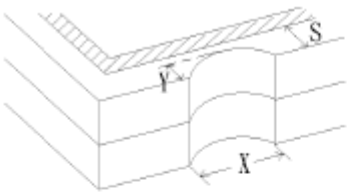	Y > S Reject
11.4.5	MINOR	LCD GLASS CHIPPING	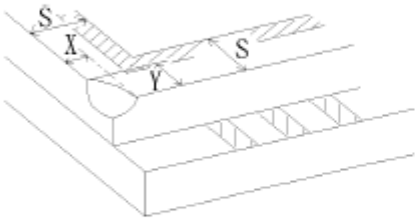	X or Y > S Reject
11.4.6	MAJOR	LCD GLASS GLASS CRACK	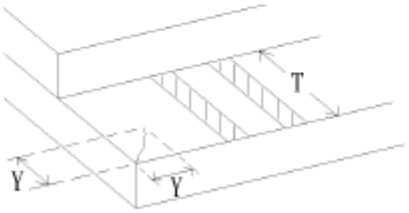	Y > (1/2) T Reject
11.4.7	MAJOR	LCD GLASS SCRIBE DEFECT		1. a> L/3 , A>1.5mm. Reject 2. B : ACCORDING TO DIMENSION
11.4.8	MINOR	LCD GLASS CHIPPING (ON THE TERMINAL AREA)	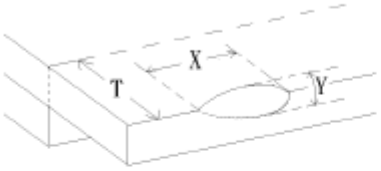	$\Phi = (x+y)/2 > 2.5$ mm Reject
11.4.9	MINOR	LCD GLASS CHIPPING (ON THE TERMINAL SURFACE)	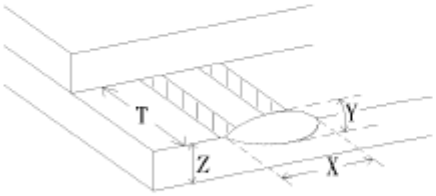	Y > (1/3) T Reject
11.4.10	MINOR	LCD GLASS CHIPPING	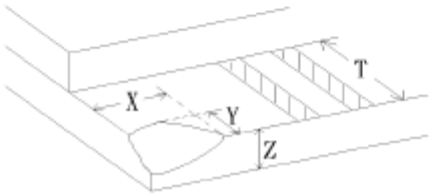	Y > T Reject

12. Handling Precautions

12.1 Mounting method

The LCD panel of Kingtech Group TFT module consists of two thin glass plates with polarizes which easily be damaged. And since the module in so constructed as to be fixed by utilizing fitting holes in the printed circuit board.

Extreme care should be needed when handling the LCD modules.

12.2 Caution of LCD handling and cleaning

When cleaning the display surface, Use soft cloth with solvent [Recommended below] and wipe lightly

- Isopropyl alcohol
- Ethyl alcohol

Do not wipe the display surface with dry or hard materials that will damage the polarizer surface.

Do not use the following solvent:

- Water
- Aromatics

Do not wipe ITO pad area with the dry or hard materials that will damage the ITO patterns

Do not use the following solvent on the pad or prevent it from being contaminated:

- Soldering flux
- Chlorine (Cl) , Sulfur (S)

If goods were sent without being silicon coated on the pad, ITO patterns could be damaged due to the corrosion as time goes on.

If ITO corrosion happen by miss-handling or using some materials such as Chlorine (Cl), Sulfur (S) from customer, Responsibility is on customer.

12.3 Caution against static charge

The LCD module use C-MOS LSI drivers, so we recommended that you:

Connect any unused input terminal to POWER or GROUND, do not input any signals before power is turned on, and ground your body, work/assembly areas, and assembly equipment to protect against static electricity.

12.4 packing

- Module employs LCD elements and must be treated as such.
- Avoid intense shock and falls from a height.
- To prevent modules from degradation, do not operate or store them exposed direct to sunshine or high temperature/humidity

12.5 Caution for operation

- It is an indispensable condition to drive LCD's within the specified voltage limit since the higher voltage then the limit cause the shorter LCD life.
- An electrochemical reaction due to direct current causes LCD's undesirable deterioration, so that the use of direct current drive should be avoided.
- Response time will be extremely delayed at lower temperature then the operating temperature range and on the other hand at higher temperature LCD's how dark color in them. However those phenomena do not mean malfunction or out of order with LCD's, which will come back in the specified operation temperature.
- If the display area is pushed hard during operation, some font will be abnormally displayed but it resumes normal condition after turning off once.
- Slight dew depositing on terminals is a cause for electro-chemical reaction resulting in terminal open circuit.

Usage under the maximum operating temperature, 50%Rh or less is required.

12.6 storing

In the case of storing for a long period of time for instance, for years for the purpose or replacement use, the following ways are recommended.

- Storage in a polyethylene bag with the opening sealed so as not to enter fresh air outside in it. And with no desiccant.
- Placing in a dark place where neither exposure to direct sunlight nor light's keeping the storage temperature range.
- Storing with no touch on polarizer surface by the anything else.
  [It is recommended to store them as they have been contained in the inner container at the time of delivery from us

12.7 Safety

- It is recommendable to crash damaged or unnecessary LCD's into pieces and wash off liquid crystal by either of solvents such as acetone and ethanol, which should be burned up later.
- When any liquid leaked out of a damaged glass cell comes in contact with your hands, please wash it off well with soap and water

13. Precaution for Use

13.1

A limit sample should be provided by the both parties on an occasion when the both parties agreed its necessity. Judgment by a limit sample shall take effect after the limit sample has been established and confirmed by the both parties.

13.2

On the following occasions, the handing of problem should be decided through discussion and agreement between responsible of the both parties.

- When a question is arisen in this specification
- When a new problem is arisen which is not specified in this specifications
- When an inspection specifications change or operating condition change in customer is reported to YUXIANGXING TFT , and some problem is arisen in this specification due to the change
- When a new problem is arisen at the customer's operating set for sample evaluation in the customer site.

14. Packing Method

TBD